BER0080

INSTRUCTION SHEET **ELECTRIC DEFLECTOR**

APPLICATION **B48C, B54C , B64C, SBG1048, SBG1054, SBG1064, SBG1084-L, SBG1064I AND SBG1074I SNOWBLOWERS.**

INSTALLATION

Preparing the Chute *(Figures 1-1A-2)*

1. **FIGURE 1:** Remove the two manual adjustment knobs and tighten the two original 5/16" NC x 1" carriage bolts (item 1), the original nylon washers (item 2), two 5/16" (3/8" hole) flat washers (item 12) and two 5/16" NC nylon insert nuts (item 3). Leave a small gap (about 1/32") between the side of the deflector and the outer nylon washer.

   NOTE: The deflector must move freely.

2. **FIGURE 1:** Place the deflector bracket (item 5) in the middle of the chute deflector (item 11) and align with the bottom edge of the deflector. Using the bracket as a template, drill four 1/2" holes in the deflector and secure in place with four 5/16" NC x 3/4" Allen flat head setscrews (item 4) and serrated flange nuts (item 6) placing the setscrew head inside the chute. Tighten until the setscrew head sinks into the inside surface of the deflector.

3. **FIGURE 1:** Retract the actuator rod (item 10) completely. Secure the actuator to the deflector bracket (item 5) and to the base bracket (item 7) with two 3/8" NC x 1 1/2" bolts (item 8) and two 3/8"NC nylon insert nuts (item 9). Secure without tightening to allow movements.

4. **FIGURE 1:** Open deflector (item 11) completely and temporarily tighten the two 5/16"NC nylon insert nuts (item 3), to prevent the deflector movement (item 11).

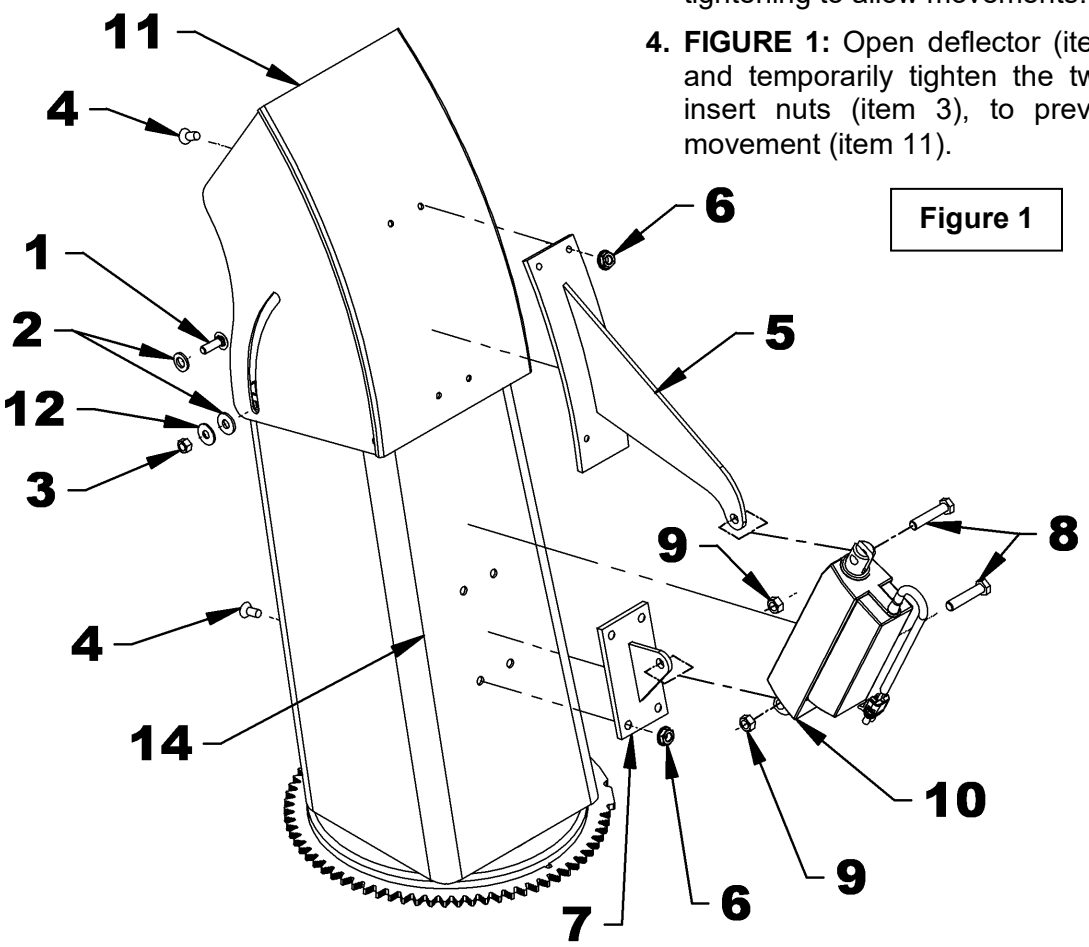

Figure 1

5. **FIGURE 1A: Position of the base bracket:** Fix a paper sheet on the back of the chute, to prevent scratches. Raise the base bracket up the back of the chute, as high as possible and draw a pencil line on top of the base bracket. Then, slide the base bracket as low as possible and draw another line on top of the base bracket. There should be a 1/8" gap between the two lines. Draw a line between those two lines and align the top of the base bracket with this line, to center the gap.

6. **FIGURE 1:** Using the bracket as a template, drill four 1/2” holes in the chute. Remove the sheet of paper. Attach the base bracket (item 7) with four 5/16" NC x 3/4" Allen flat head setscrews (item 4) and serrated flange nuts (item 6) placing the setscrew head inside the chute. Tighten until the setscrew head sinks into the inside surface.

7. **FIGURE 1:** Untighten the two 5/16"NC nylon insert nuts (item 3) and leave a small gap (about 1/32") between the side of the deflector and the outer nylon washer.

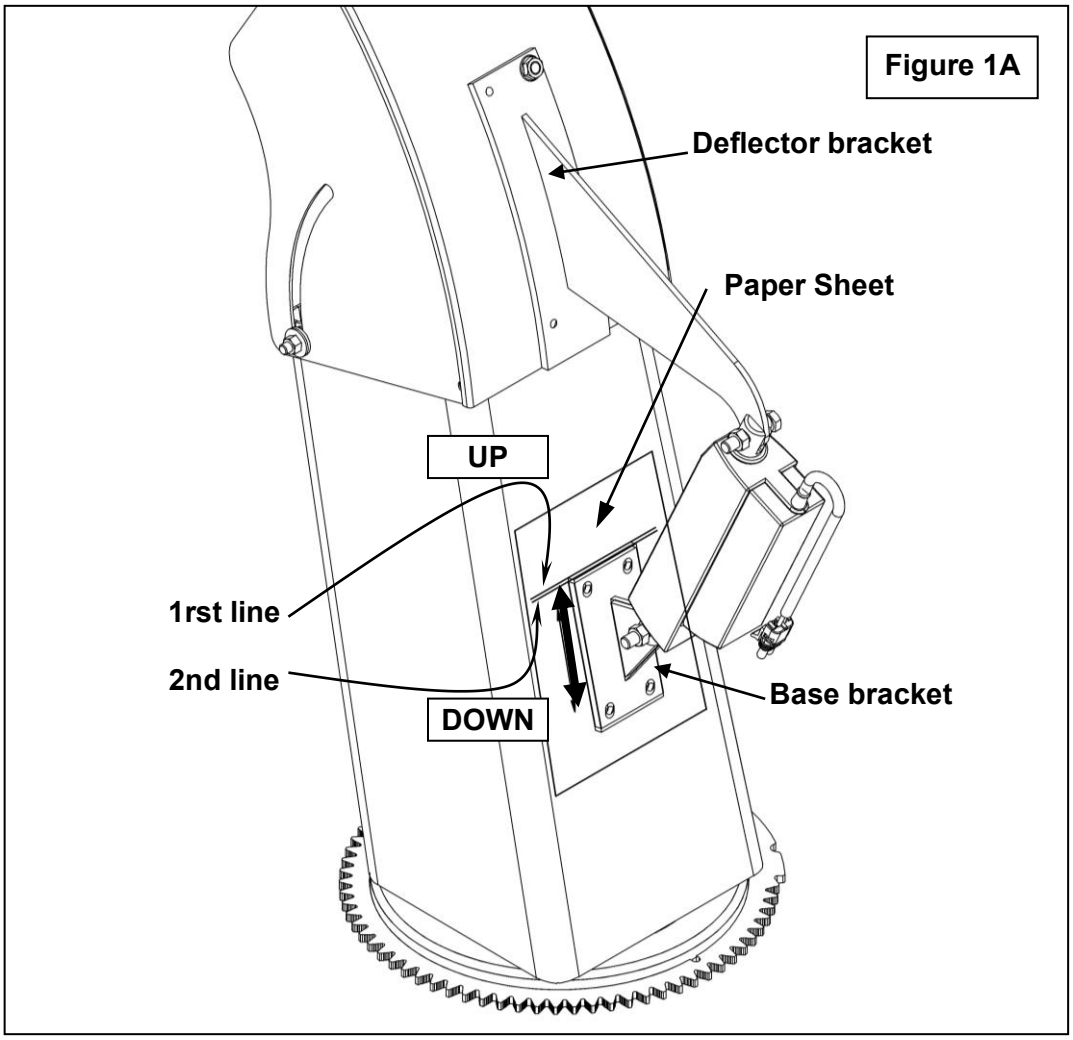

8. **FIGURE 2:** Install the hose support (item 1) using two 3/8"NC x 1 1/2" hex bolts (item 3) and two 3/8"NC nylon insert locknuts (item 4). The hose support can be installed on the right or left side of the three point upper hitch bracket (item 2).
9. Rotate left the chute to maximum and attach the actuator harness to the hose support with tie wraps, leaving enough length for play in the harness. Then rotate right the chute to maximum and check if the harness is long enough, to not be clamped in any snowblower parts (gear etc.).
10. Bring the harness as close as possible to the tractor and attach with tie wraps to appropriate places.

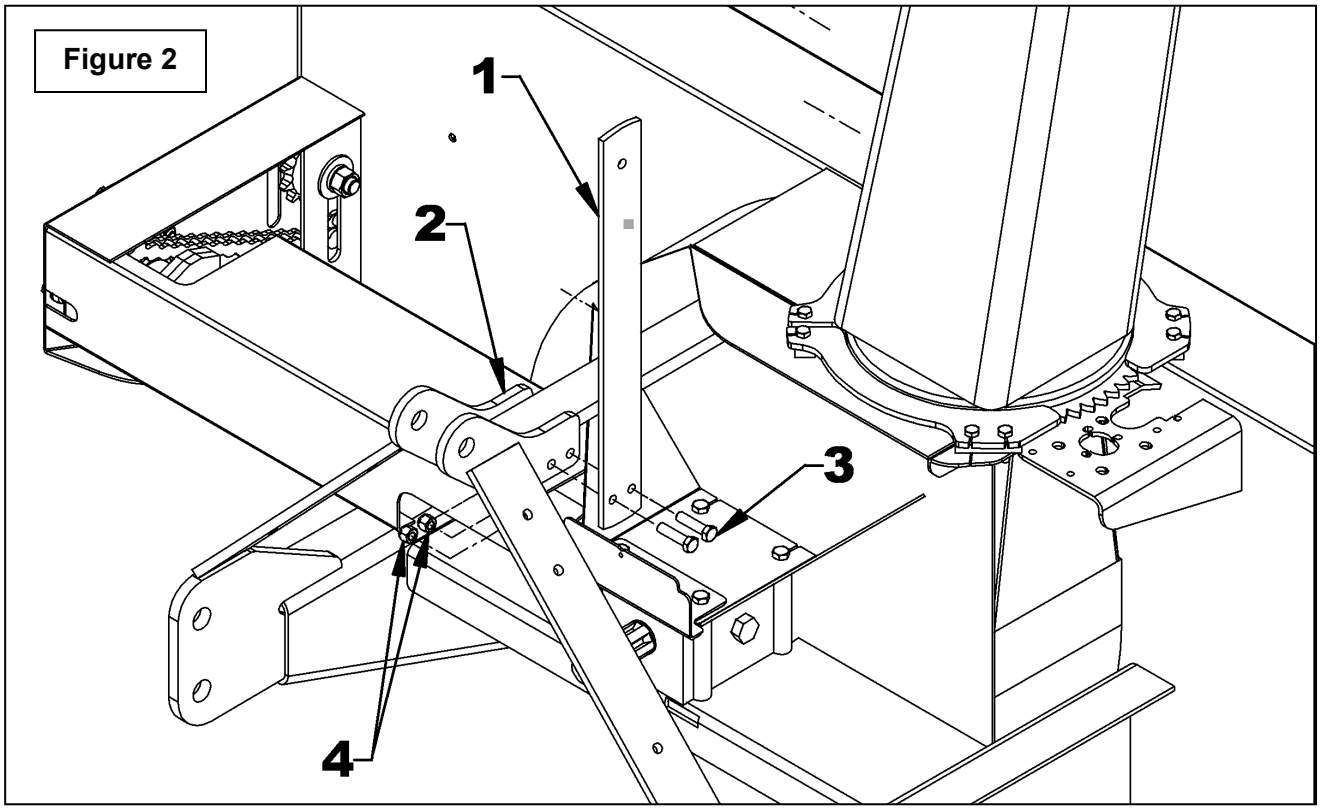

Installation of Electrical Components

(Figures 3-4-5-6-7)

1. **Figure 3:** Place the switchbox (item 1) on the lever in a position that will be comfortable when the hand is on the knob and attach with the box clamp (item 5), two 1/4" NC x 1" hex bolts and two 1/4" lockwashers (items 3-4).

   NOTE: Tighten the bolts just enough to secure the clamp and the switchbox on the lever. DO NOT TIGHTEN TOO MUCH so as not to deform the clamp. Make sure the clamp is in the proper position so the lower openings on the switchbox are not blocked. See figures 4 and 5.

   NOTE : If the switch is difficult to reach when installed on the lever, install it on the dashboard instead by drilling a Ø1/2" in an area that will not interfere with the existing controls or the electrical system.

2. Connect the harness female connector with two wires (red and black) to the actuator harness male connectors. Bring the harness to the tractor switch box. Raise and lower the snowblower in extreme positions, and check if the harness is long enough to not interfere with any parts.

3. **Figure 3:** Strip 1/4" from the end of the wires (items 7-9) as well as from the two yellow wires (items 6).

4. **Figure 3:** Twist the red wire end (item 7) with a yellow wire (item 6A) and the black wire end (item 9) with the other yellow wire (item 6B).

5. **Figure 3:** Install the two identical round terminals (item 8) on the twisted ends.

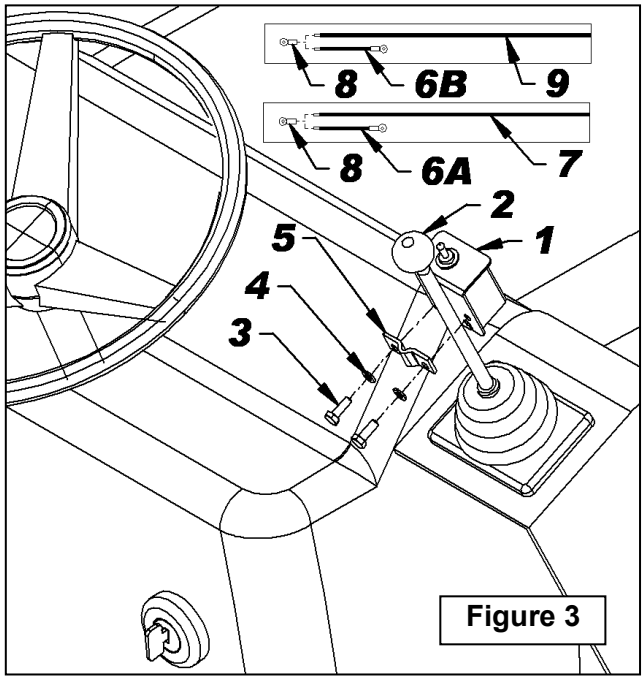

Figure 3

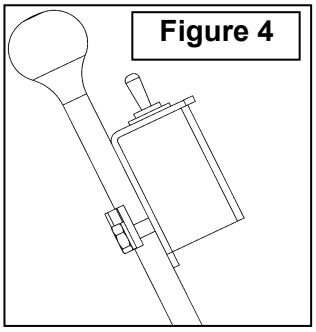

Figure 4

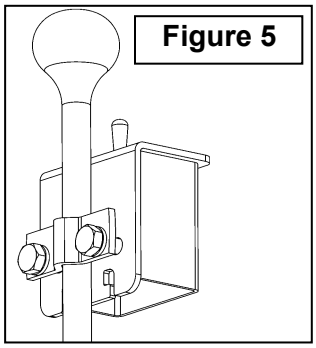

Figure 5

6. **Figure 6:** Connect the two wire assemblies as illustrated by connecting the red wire to the "B" blade and the yellow wire attached to the red wire to the "E" blade. Then connect the black wire to the "A" blade and the yellow wire to the "F" blade.
7. **Figure 6:** Connect the two remaining wires, the red wire to the "C" blade and the black wire to the "D" blade.
8. **Figure 7:** Insert the switch (item 4) in the switchbox (item 2) and secure with the two nuts (items 1-3) in the order illustrated. Install the cap on the switch.
9. Find a wire on the tractor that is an accessory power source which means that only has current when the contact is turned on.
10. Attach the connector tap (item 22, parts section) to the chosen power source and bring the red wire to the connector tap cutting the surplus wire if necessary. Secure in place by lowering the metal blade of the connector.
11. Find a bolt on the tractor that can serve as ground. Bring the black wire to that bolt and attach solidly.
12. Cut the 260" long loom, in two pieces according to the following needed lenght. Install the looms, one on the two wires that start at the snowblower until the switchbox,and the other on the two power supply wires. Cut the surplus if necessary and apply electrical tape to keep the looms closed. Secure everything in place on the tractor with tie wraps.

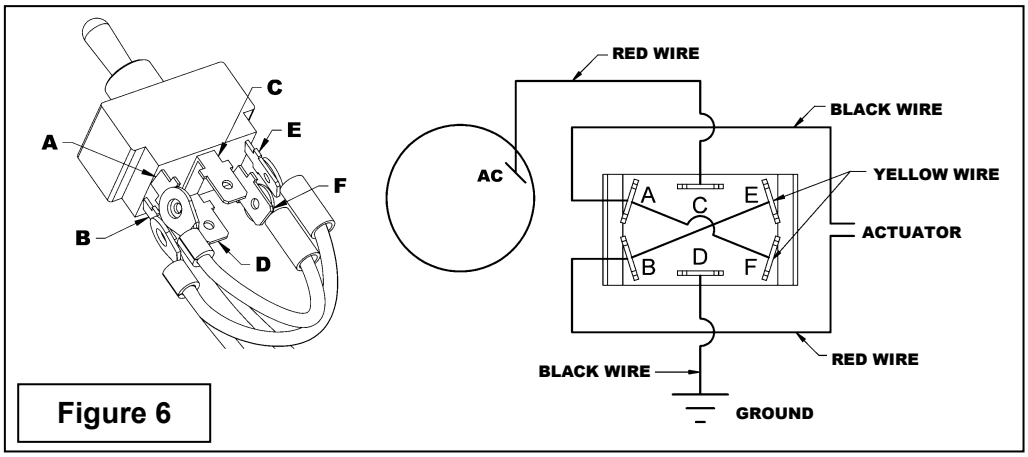

Figure 6

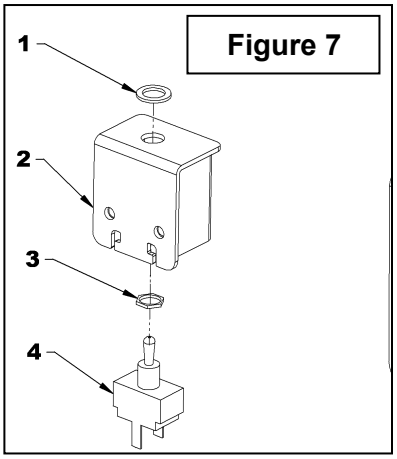

Figure 7

PARTS

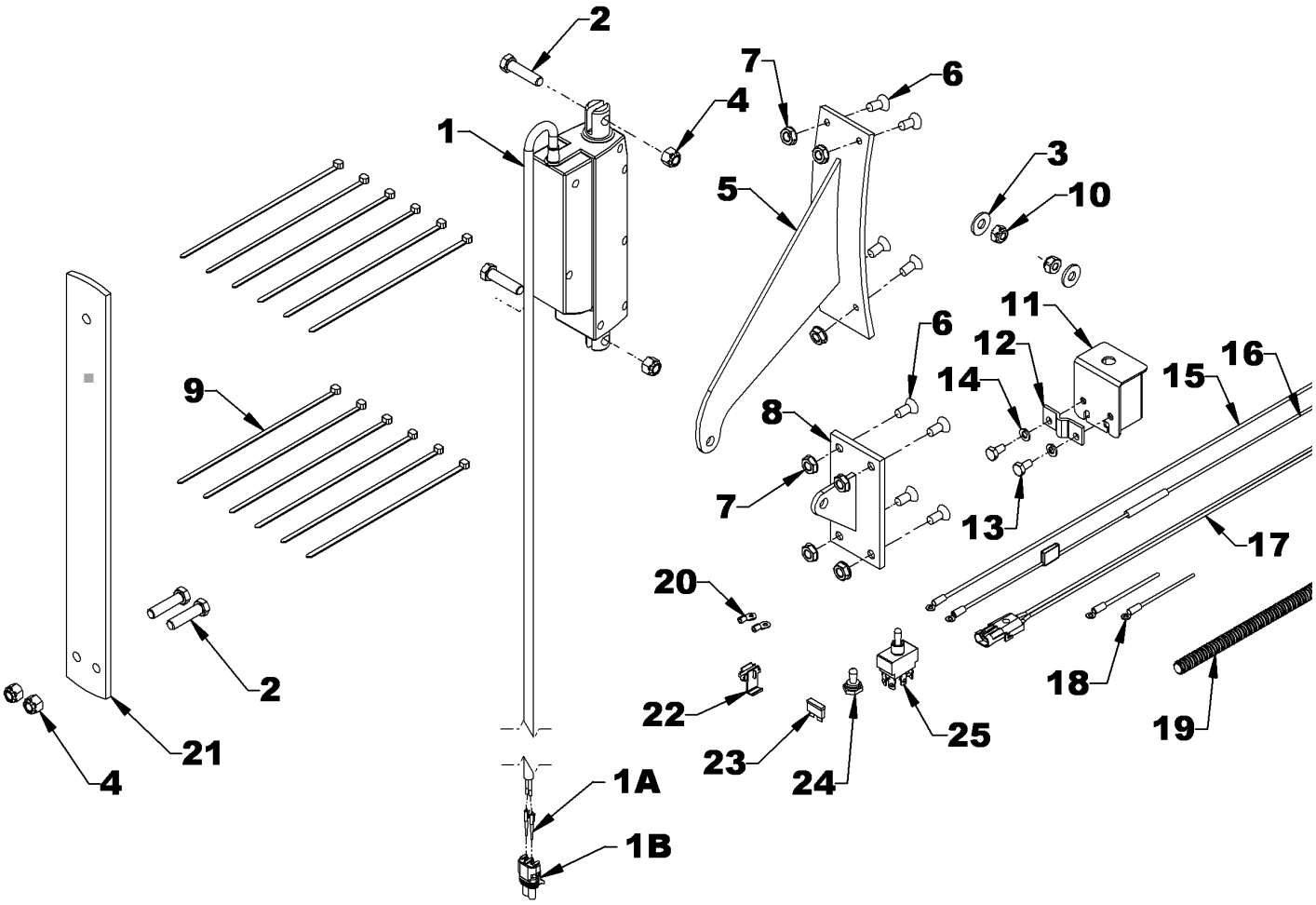

PARTS

REF.	DESCRIPTION	QTY	PART #
1	Actuator	1	667714
1A	Male terminal	2	663282
1B	Male connector 2 cavities D-A	1	663280
2	Bolt hex. 3/8” NC X 1 1/2” Plated	4	0100040
3	Flat washer 5/16" (3/8” hole) Plated	2	1400003
4	Nut nylon insert 3/8”NC Plated	4	1000006
5	Deflector bracket	1	667750
6	Allen flat head set screw 5/16" NC x 3/4" lg. gr.5 Plated	8	0700003
7	Nut serrated flange 5/16”NC Plated	8	0900036
8	Base bracket	1	667749
9	Nylon tie wrap 8" lg, 4.8mm, black	12	2100003
10	Nut nylon insert 5/16”NC Plated	2	1000005
11	Switchbox	1	667557
12	Switchbox clamp	1	667558
13	Bolt hex. 1/4” NC x 1” Plated	2	0100004
14	Lockwasher 1/4” Plated	2	1200002
15	Wire 14GA x 72” lg. ass. black - Negative power supply	1	4000096
16	Wire 14GA x 72” lg. & Fuse ass. black - Positive power supply	1	4000098
17	Harness 14GA x 144” lg. - Actuator power supply	1	4000097
18	Wire 14GA x 3” lg. Ass. yellow	2	667713
19	Loom 260" lg	1	669315
20	Round terminal 6-8 wire 10-12GA	2	4000043
21	Hose support	1	669031
22	Tap connector	1	656665
23	Fuse 5 amp. ATO	1	4000060
24	Rubber cap	1	658666
25	Switch	1	658778